amplifier pallet

ETK-1819G100

ETIK amplifier pallet ETK-1819G100 belongs to ETIK multipurpose amplifier line.
The frequency range runs from 1.805 to 1.88 GHz thus making the tactical jamming environment its perfect field of applications although it is also frequently used in industrial and scientific applications.
With its shielding case it is also a perfect amplifier to run Lab tests at low power.

Designed on microstrip technology and provided with the latest generation rugged LDMOS it also incorporates a drop-in a state of the art output circulator that prevents damage even in presence of 100% reflected power while introducing very low losses.
The amplifier is designed to be mounted on any kind of heat sink either for air and liquid cooling.
It features also 4 probes providing current, forward power, reflected power and temperature measurements in order to keep the performances constantly monitored.

The small footprint allows to get a very notable power density when combined with others of the same family to achieve high power levels.

amplifier pallet

ETK-1819G100

Technical Specifications

Working frequency	1.805 - 1.88 GHz
Output Power (Pulsed)	100 W
Class	AB
Gain	50 dB
VSWR	∞ (any phase)
Harmonics	<30 dBc
Input Connector	SMA F (other on request), 50 Ω
Output Connector	"N" F (other on request), 50 Ω
Power supply	28 Vdc
Current Consumption	7 A
Size (WxDxH)	191,25 x 76,5 x 27 mm
Shielding case	Optional

Features and specifications subject to change without notice
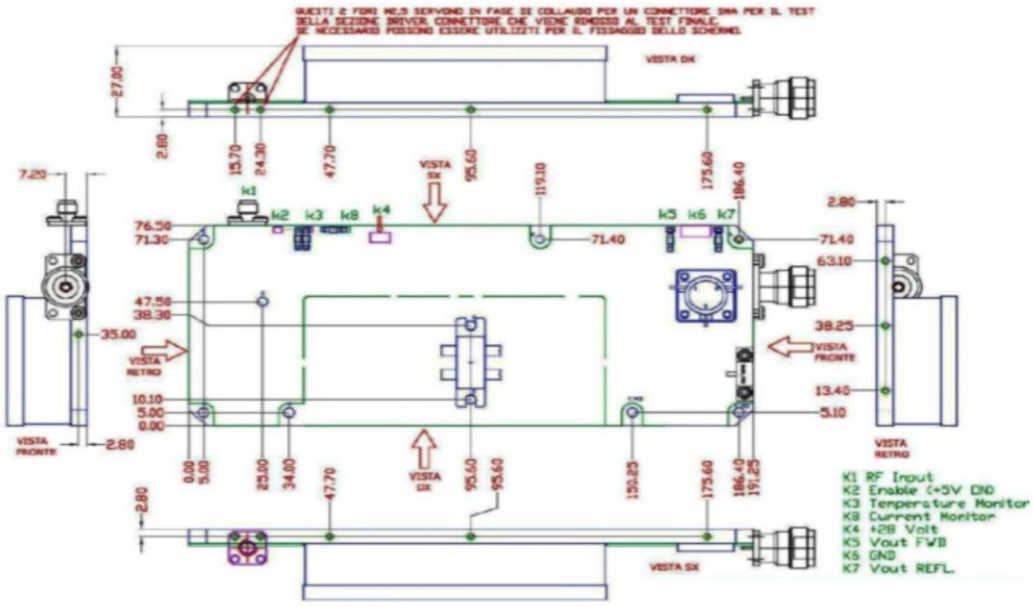
Mechanical Layout